BP6211M ! !

MOSFDS /

k

k

0 V k

BP6211M SOP-8 k

- 100 V MOSFET
- CCM/DCM/QR
- CCM
- DCM
- 0 V
- 4 A
- MOSFET
- QC/USB-PD/ AC-DC
- !

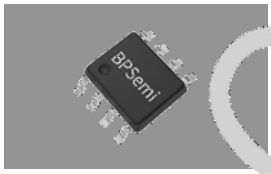

SOP-8

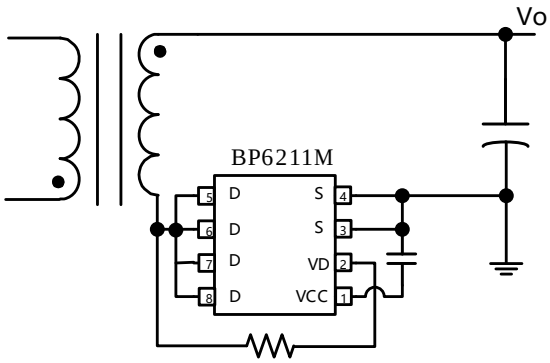

1. BP6211M

BPS Confidential

B